TLM-A062-EN-C/T-2610-02

TAMRON Model: A062 Owner's manual

20-40mm F/2.8 Di III VXD

For Sony E-mount
For Nikon Z mount

1

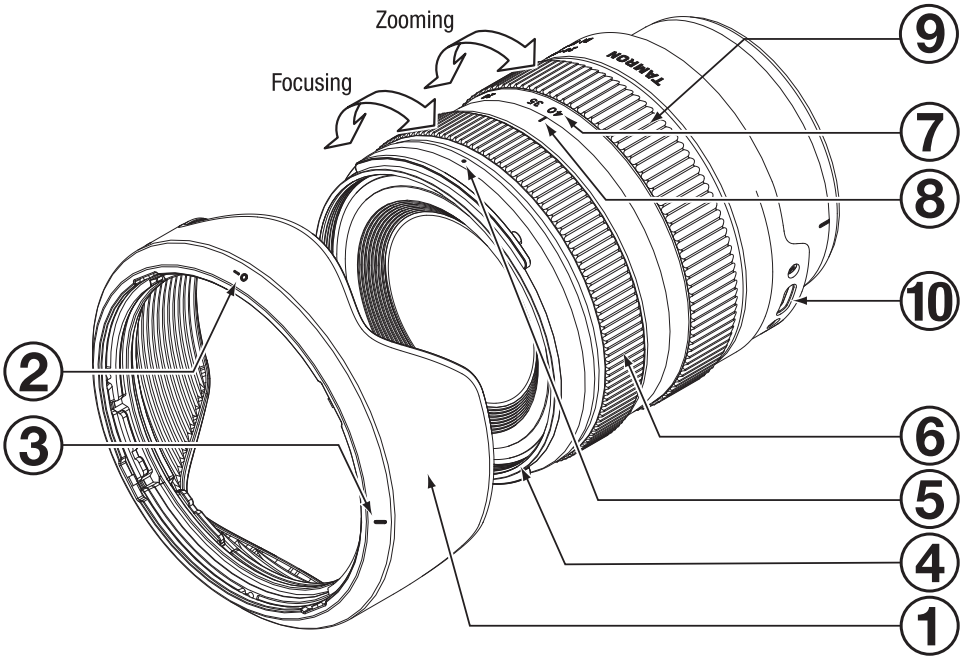

Sony E-mount

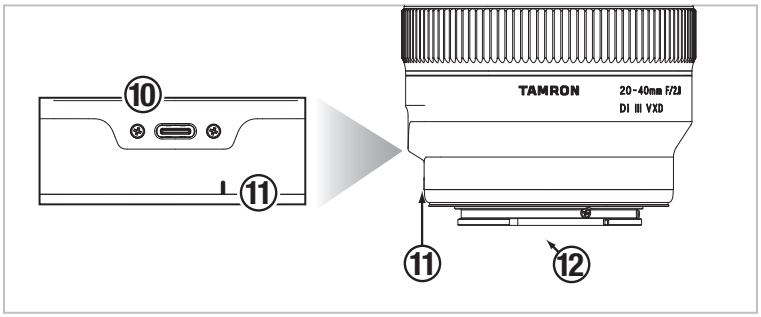

Nikon Z mount

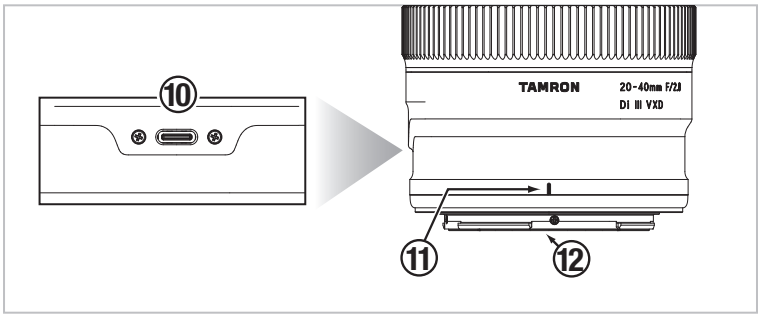

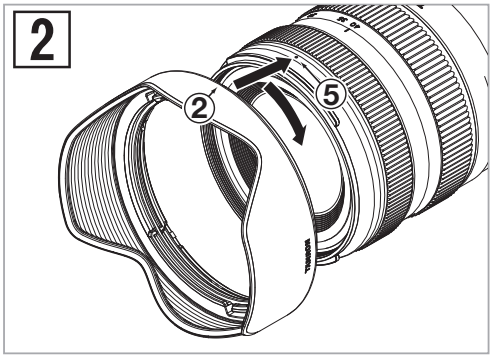

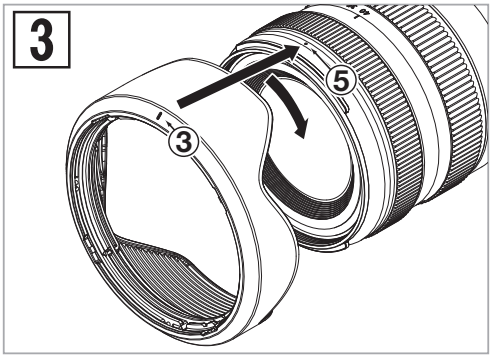

CE
* The CE Marking is a directive conformity mark of the European Community (EC).
* Das CE-Zeichen entspricht der EC Norm.
* La marquage CE est un marquage de conformité à la direcive CEE (CE).
* La marca CE es marca de conformidad segun directiva de la Comunidad Europea (CE).
* Il marchio CE attesta la conformita alla directtiva della Comunità Europea (CEE).
* CE 标志表示符合欧州共同体 (EC) 指标

CE
The EEC Conformity Report applies to the Council Directive 2014/30/EU, 2011/65/EU and is used by Tamron Co., Ltd., manufacturer of this product.

Important information about software:
https://s3-ap-northeast-1.amazonaws.com/tamron-docs/consumer/support/download/inst/a062/a062_oss.pdf

For Customer in UK
STATEMENT OF COMPLIANCE
UK Product Security and Telecommunications Infrastructure Act 2022
https://www.tamron.eu/en-GB/help-center/psti

For Customer in EU
SIMPLIFIED EU DECLARATION OF CONFORMITY & SECURITY INFORMATION in compliance with Regulation (EU) 2024/2847.
https://www.tamron.eu/en/eu-compliance

ENGLISH

Thank you for purchasing this Tamron lens. Before using your new lens, please read the contents of this Owner's manual to properly use the lens. Also, it will be important to read the manual of the camera to which you will attach the lens.
After reading, store this Owner's manual in a safe place.
Please read also the document "Precautions for Safe Use of Tamron Lenses" for the detailed safety precautions to observe when using Tamron lenses.

- **Explains precautions that help to prevent problems.**

- Explains things you should know in addition to basic operations.

PART NAMES (Refer to Fig. 1)

① Lens Hood
② Hood Attaching Alignment Mark
③ Hood Locking Mark
④ Filter Ring
⑤ Hood Release Mark
⑥ Focus Ring*
⑦ Focal Length Scale
⑧ Focal Length Mark
⑨ Zoom Ring
⑩ Connector Port
⑪ Lens Attachment Mark
⑫ Lens-camera Interface Contacts

* Corresponds to the control ring on Nikon Z mount lens.

MAIN SPECIFICATIONS

Model	A062
Focal Length	20 - 40 mm
Maximum Aperture	F/2.8
Angle of View (diagonal)	94°30' - 56°49'
Optical Construction	11/12
Minimum Object Distance (MOD)	0.17 m (6.7") (Wide) / 0.29 m (11.4") (Tele)
Maximum Magnification Ratio	1:3.8 (Wide MOD) /1:5.1 (Tele MOD)
Filter Size	ø 67 mm
Maximum Diameter	ø 74.4 mm
Length	86.5 mm (3.4") / Sony E-mount, 88.7 mm (3.5") / Nikon Z mount
Weight	365 g (12.9 oz) / Sony E-mount, 380 g (13.4 oz) / Nikon Z mount
Sensor Size	Full frame
Lens Hood	HA062
Connector Type	USB Type-C

- **Length : From front end of the lens to mount surface.**
- **Specifications, appearance, functionality, etc., are subject to change without prior notice.**

ATTACHING AND REMOVING THE LENS

Remove the rear cap of the lens. Align the Lens Attachment Mark ⑪ and mounting mark on the camera, and then insert the lens.
Turn the lens clockwise for Sony E-mount lens or counterclockwise for Nikon Z mount lens until it locks.
To remove the lens, turn the lens in the opposite direction while pressing the lens release button on the camera.

- **Turn off the power of the camera before attaching or removing the lens.**

- For details, please read the instruction manual of your camera.

SWITCHING FOCUS MODE (Ref. Fig. 1)

■ For Sony E-mount

Select the desired focus mode on the camera.
For manual focusing, turn the Focus Ring ⑥ to acquire the desired focus.

■ For Nikon Z mount

Select the desired focus mode on the camera.
Auto Focus: Apply a function from your camera and control with the Focus Ring ⑥.
Manual Focus: Turn the Focus Ring ⑥ to focus manually on the subject.

- **Under AF mode, there may be difficulty for autofocus to work depending on the subject.**

- For details, please read the instruction manual of your camera.

CONNECTOR PORT (Ref. Fig. 1)

Connect the Connector Port ⑩ to a computer using the TAMRON connection cable (sold separately) and use the dedicated "TAMRON Lens Utility ™" application to customize the focus ring and update the firmware.
See the online help of "TAMRON Lens Utility" using the link below for more details.
https://www.tamron.com/global/consumer/soft/lensutility/

- **Do not use the TAMRON connection cable (sold separately) for any purpose other than connecting the TAMRON lens equipped with a connector port to a computer.**
- **Tamron will not bear any responsibility for any loss or damage of data in use of the TAMRON connection cable (sold separately).**

ZOOMING (Ref. Fig. 1)

Turn the Zoom Ring ⑨ to adjust the focal length (Zoom position) to a desired position.

LENS HOOD (Ref. Figs. 1, 2, 3)

The Hood ① can eliminate stray light that may affect the picture.

■ Using the Lens Hood (Ref. Fig. 2)

Align the Hood Attaching Alignment Mark ② of the hood with the Hood Release Mark ⑤ of the lens.
Rotate the Hood ① in the direction of the arrow until the Hood Locking Mark ③ meets the Hood Release Mark ⑤.

■ Stowing the Lens Hood (Ref. Fig. 3)

Attach the Hood ① in reverse and rotate it until it locks.

- **Be aware that the periphery of the photographed image may be darkened if the Hood ① is not attached properly.**

USAGE PRECAUTIONS

- An internal focusing (IF) system is employed to reduce the minimum focus distance. The angle of view may be wider than that of lenses with other focusing systems when shooting at a distance less than infinity.
- The lens hood or the lens barrel may block the light from the flash. It is recommended to perform trial shooting in advance.
- Differences in the display systems of cameras may cause to show values different from the maximum and minimum aperture values from the specifications. This is not an indication of an error.
- Do not touch the Lens-camera Interface Contacts ⑫ with your fingers. Otherwise, it may cause a malfunction.
- If the temperature changes suddenly, condensation may form and cause malfunctions.
- The front lens is covered with stain-proof coating. After removing the dust on the lens surface with a blower or another means, wipe it with a dry cloth.
- Never use benzene, thinner, or other organic solvents to clean the lens.
- Store the lens in a clean and well-ventilated place.
- For more details on the lens cleaning and storage, the compatibility with cameras, and other support information see our website. https://www.tamron.com/global/consumer/support/

Disposal of Electrical and Electronic Equipment in Private Households. Disposal of used Electrical & Electronic Equipment (Applicable in the European Union and other European countries with separate collection systems)

This symbol indicates that this product shall not be treated as household waste.
Instead it shall be collected separately for the recycling of electrical and electronic equipment.
If the new products are purchased, this product might be handed over to the distributor or the collection system of waste electrical and electronic equipment eventually.

By ensuring this product is disposed of correctly, you will help prevent potential negative consequences for the environment and human health, which could otherwise be caused by inappropriate waste handling of this product or components of this product.
If this product is disposed illegally, it might cause a possibility of penalties. For more detailed information about recycling of this product, please contact your local Civic Office, your household waste disposal service or the shop where you purchased the product.

TAMRON

ENGLISH

Precautions for Safe Use of Tamron Lenses

For safe operation be sure to carefully read this "Precautions for Safe Use of Tamron Lenses" and the manual before using the product.
After reading them, store them in a place where they can easily be reviewed whenever needed.
Caution instructions are divided into the following two categories according to the degree of danger involved.

⚠ **WARNING**	**This indicates instructions which if not followed or if performed incorrectly could lead to death or serious injury.**

- **Do not view the sun or other strong light source directly through the lens or through a camera while using this lens.**
  Doing so could cause loss of vision, damage to the lens and/or the camera, and possibly cause the lens and/or camera to ignite.
- **Do not dissemble, repair, or modify the lens.**
  This could damage the lens or camera.
- **Keep the lens out of the reach of small children.**
  There is a risk of injury if the lens is dropped or falls down.

⚠ CAUTION	This indicates instructions which if not heeded or if performed incorrectly could lead to bodily injury or physical damage

- Do not place lens in direct sunlight or leave it in an extremely hot place such as inside a car. Doing such could damage the internal parts of the lens or cause a fire.
- Always attach the lens cap whenever the lens is not in use.
- When attaching the lens to the camera, ensure that the lens has been properly attached to the camera and firmly locked.
  If the lens is not attached properly, it could be difficult to remove or it could fall off causing damage or injury.
- Do not use this lens for any application other than photography.
- Do not carry around the lens while it is still attached to a tripod.
- Regarding the lens equipped with a connector port
  1) Place the lens in a stable location when customizing the lens using the dedicated application (TAMRON Lens Utility ™). Make sure not to let it fall or impact the lens.
  2) When connecting the lens to a computer, use a Tamron connection cable (sold separately).
  3) Do not touch the connector port with your fingers or a metal object. Also, prevent dust or water from adhering to the connector port. If the connector port is dirty, it may cause connection problems.
- Tamron will not be responsible for damages caused by a failure, a fire, or other accidents that may occur when using an accessory other than Tamron accessories. Note that in case of such damage, repair of the Tamron lens will be charged since it is not covered by the warranty.