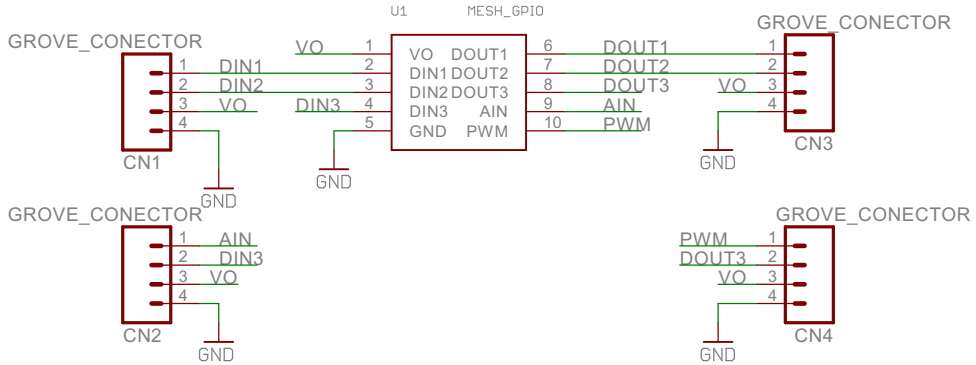

	Switch Science, Inc.
	mesh_gpio_grove
	2017/09/21 15:36:32
	Sheet: 1/1