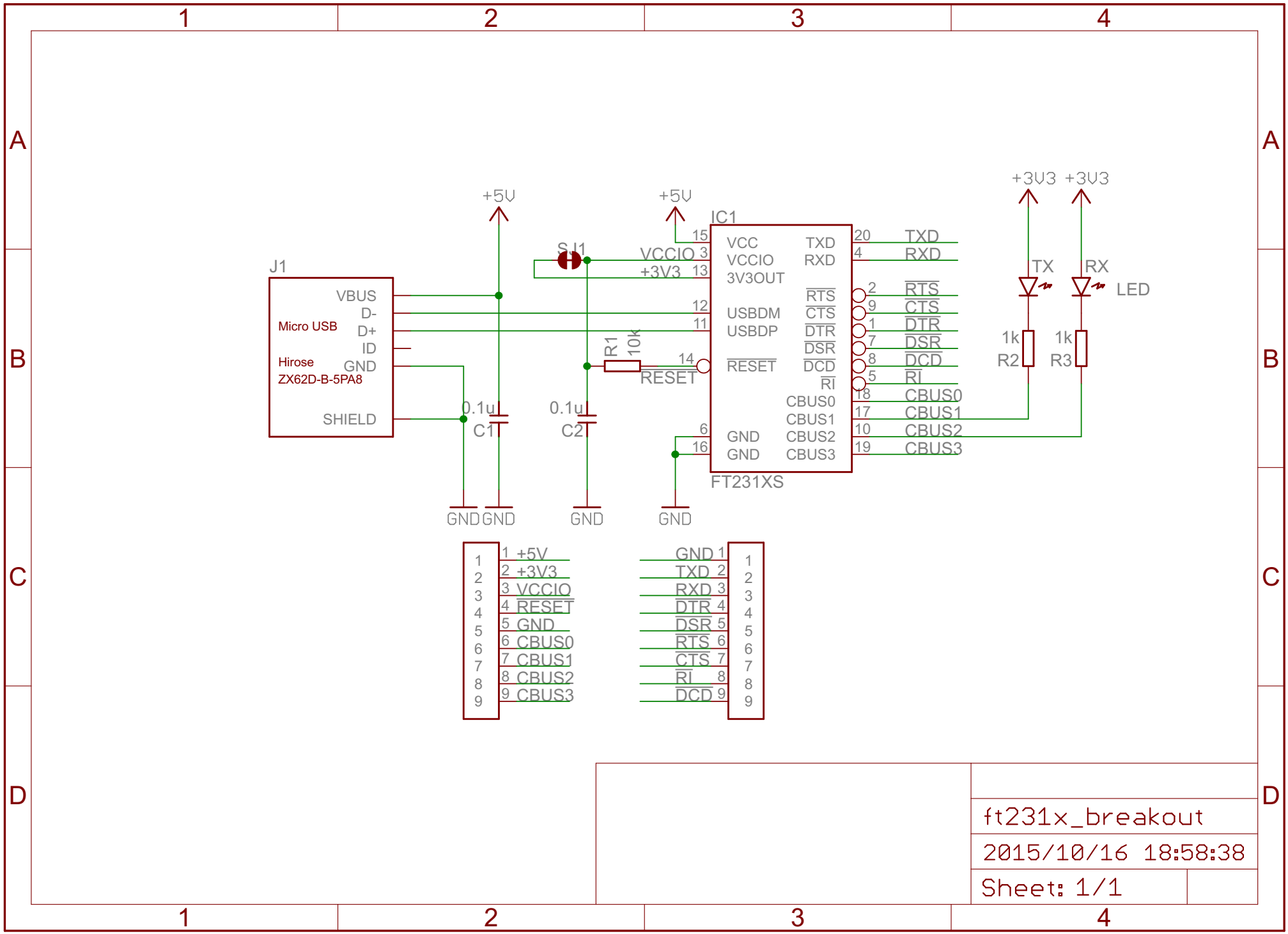
J1
Micro USB
Hirose
ZX62D-B-5PA8
VBUS
D-
D+
ID
GND
SHIELD
+5V
+5V
SJ1
VCCIO
+3V3
IC1
VCC
VCCIO
3V3OUT
USBDM
USBDP
RESET
GND
GND
TXD
RXD
RTS
CTS
DTR
DSR
DCD
RI
CBUS0
CBUS1
CBUS2
CBUS3
FT231XS
R1
10k
RESET
0.1u
C1
0.1u
C2
GND
GND
GND
GND
+3V3
+3V3
TX
RX
LED
1k
R2
1k
R3
1 +5V
2 +3V3
3 VCCIO
4 RESET
5 GND
6 CBUS0
7 CBUS1
8 CBUS2
9 CBUS3
GND 1
TXD 2
RXD 3
DTR 4
DSR 5
RTS 6
CTS 7
RI 8
DCD 9
ft231x_breakout
2015/10/16 18:58:38
Sheet: 1/1