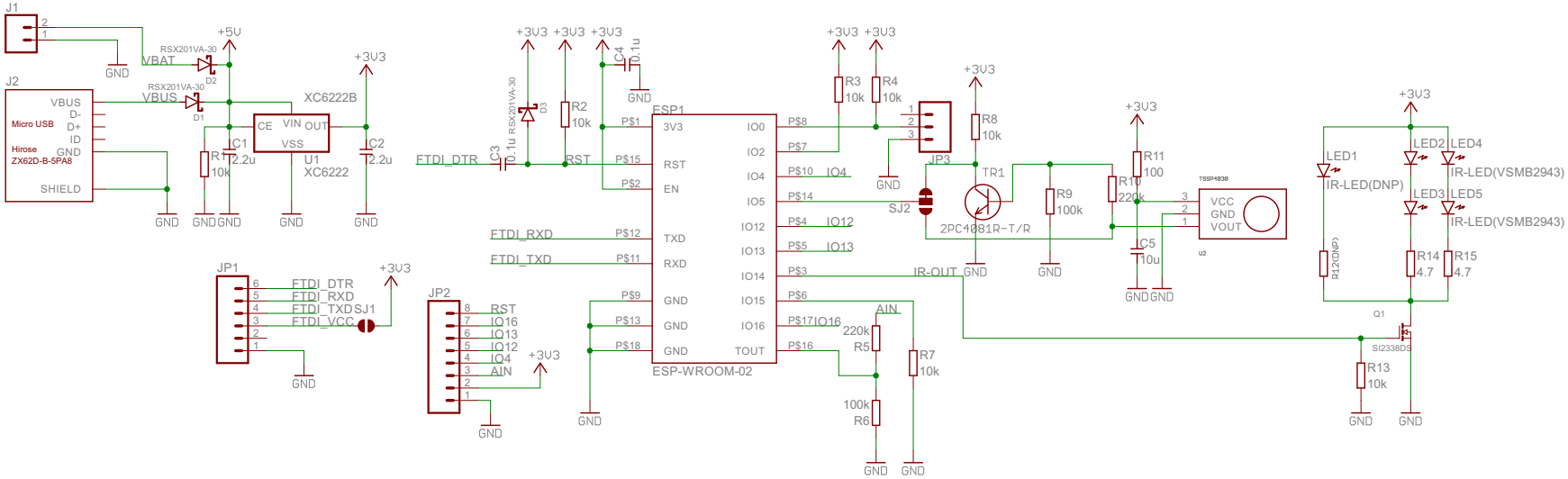

TITLE: ESP_IR	
Document Number:	REV:
Date: 2016/06/01 15:04:16	Sheet: 1/1